City of Salinas

COMMUNITY AND ECONOMIC DEVELOPMENT DEPARTMENT
65 W. Alisal Street * Salinas, CA 93901 * (831) 758-7206 * Fax (831) 758-7215

October 29, 2014

Jeff Lorentz
2460 Garden Road, Suite G
Monterey, CA 93940

SUBJECT: MINOR MODIFICATION 2014-016; A REQUEST TO MODIFY SITE PLAN REVIEW 2009-013 TO CHANGE THE EXISTING APPROVED SITE PLAN TO ALLOW THE REMOVAL AND REPLACEMENT OF THE EXISTING AC PARKING LOT WITH A CONCRETE TRUCK CIRCULATION PATHWAY AND TO INSTALL STABILIZED RECYCLED AGGREGATE IN THE RELOCATED PARKING AREA AT 745 AIRPORT BOULEVARD IN THE INDUSTRIAL GENERAL AND AIRPORT OVERLAY (IG/AP) ZONING DISTRICTS

Dear Mr. Lorentz:

On October 21, 2014, the Community and Economic Development Department received revised plans for the subject application requesting approval to modify Site Plan Review 2009-013 (SPR 09-13) to change the existing approved site plan to allow the removal and replacement of the existing AC parking lot with a concrete truck circulation pathway and to install stabilized recycled aggregate in the relocated parking area on the above referenced address.

This correspondence responds to your request to amend SPR 09-13 as referenced above. I am pleased to report that we have completed our review of your request to amend the SPR. Because the request to change the previously approved plan is substantially in compliance with the original approval and conditions of the SPR, the request for Minor Modification is hereby approved based on the following findings and conditions:

1. *Industry, General,* as defined by Zoning Code Section 37-10.330 is allowed in the subject Industrial General (IG) District with approval of a Site Plan Review (SPR). Because the subject site is regulated by SPR 09-13, an amendment to the SPR is required.

2. All site improvements shown on the project plans and required by the terms and requirements included herein shall be installed by the project applicant, subject to verification by the project planner at the time of Final Inspection of the Building Permit.

3. Prior to issuance of a building permit, detailed landscape and irrigation plans shall be submitted by the Applicant for review and approval for all new landscaping.

4. Landscaping shall be continuously maintained in a healthy, growing condition.

5. Approval of a Sign Permit shall be required for all exterior signs before installation of any signs visible from the outside and shall be issued in accordance with *Article V, Division 3: Signs* of the Salinas City Zoning Code.

6. With execution of this Minor Modification, Site Plan Review 1997-024 will be null and void.

7. This Minor Modification shall expire one year after its execution date unless one of the following conditions are met:

    a. A Building Permit is issued and construction diligently pursued; or
    b. The use is established; or
    c. The Planning Manager determines that other substantial action has been commenced to carry out the terms and intent of this Minor Modification.

Please be advised that the Minor Modification was approved by action of the Planning Manager on October 29, 2014 and shall become effective on November 10, 2014 unless appealed to the Salinas Planning Commission in accordance with *Article VI, Division 17: Appeals*.

This Permit shall be null and void and all terms and conditions shall have no force or effect unless this permit is signed by the permittee(s) and returned to the City of Salinas Community and Economic Development Department within 30 days of issuance. ***It is the applicant's responsibility to track the 30-day expiration date. No notice will be sent.***

The Minor Modification is hereby approved as set forth in the attached exhibits. All remaining terms, requirements, and conditions of Site Plan Review 2009-013 remain in full force and effect. Please acknowledge your acceptance of this Minor Modification by signing the enclosed copy of this letter and returning it to our office. If I can be of further assistance, please call me at (831) 758-7206.

Sincerely,

Stephanie Moore

Stephanie Moore
Planning Intern

This Minor Modification to SPR 2009-013 is hereby acknowledged and accepted:

Dated:_____ _____

Jeff Lorentz
Applicant

CONSENT *is hereby granted to the Permittee to carry out the terms and conditions of this Amendment to Site Plan Review 2009-013.*

PROPERTY OWNER: Codiga, Christopher M Et Al

Dated:_____ _____

Clark Codiga
Property Owner

Attach:
Exhibit A: Standard Permit Conditions
Exhibit B: Title Sheet (Sheet C1)
Exhibit C: Demolition Plan (Sheet C2)
Exhibit D: Site and Utility Plan (Sheet C3)
Exhibit E: Grading and Drainage Plan (Sheet C4)
Exhibit F: Erosion Control Plan (Sheet C5)
Exhibit G: Construction Details (Sheet C6)
Exhibit H: Construction Details (Sheet C7)
Exhibit I: Landscape Plan (Sheet L1)
Exhibit J: Engineering comments dated September 29, 2014
Exhibit K: Fire Department comments dated September 8, 2014

cc: Planning Manager; SPR 2009-013 file

I:\ComDev\StephanieMoore\MMs\MM 2014-013 (626 Brunken Ave)\MM 2014-013 Approval Letter (626 Brunken Avenue).docx

STANDARD PERMIT CONDITIONS

The following standard conditions shall be incorporated by reference into all permits and subdivision map approvals in conjunction with the Salinas Zoning Code and Subdivision Ordinance:

- *Pursuant to Salinas City Code Section 1-8.1: Civil action enforcement, and Section 1-8.2: Liability for costs, permittee shall reimburse the City of Salinas for all costs and expenses (including but not limited to fees and charges of architects, engineers, attorneys, and other professionals, and court cost(s) incurred by the City in enforcing the provisions of this Permit.*

- *Use of the property shall be conducted in such a way that it does not constitute a nuisance to the use and enjoyment of surrounding properties or the public. Any permittee, person, firm, corporation, whether as principal, agent, employee or otherwise, violating, causing or maintaining the violation of any of the provisions of this Permit shall be guilty of a misdemeanor or an infraction, as charged. Upon determination by the Planning Manager that there are reasonable grounds for revocation of this Permit, a revocation hearing shall be set to be heard before the Salinas Planning Commission in accordance with Section 37-60.1330: Revocation of permits, of the Salinas Zoning Code.*

- *The applicant(s) shall defend, indemnify, and hold harmless the City of Salinas or any of its boards, commissions, agents, officers, and employees from any claim, action or proceeding against the City, its boards, commissions, agents, officers, or employees to attack, set aside, void, or annul, the approval of this project/use. For Tentative Maps, this shall also apply when such claim or action is brought within the time period provided for in applicable state and/or local statutes. The City shall promptly notify the applicant(s) of any such claim, action, or proceeding. The City shall cooperate in the defense. Nothing contained in this condition shall prohibit the City from participation in a defense of any claim, action, or proceeding if the City bears its own attorney's fees and costs, and the City defends the action in good faith.*

- *Notwithstanding any of the provisions in this permit, all improvements and uses shall comply with all other ordinances and regulations of the City of Salinas and all local, state and federal laws and regulations.*

- *No further development other than that shown on this permit or attached exhibits shall be allowed unless or until an amendment to this permit has been approved by the Planning Manager.*

EXHIBIT "A"

GENERAL NOTES

1. ALL WORK SHALL BE COMPLETED IN ACCORDANCE WITH THESE PLANS AND SPECIFICATIONS HERE ON. IN ADDITION ALL WORK SHALL ALSO CONFORM WITH THE LATEST REVISION OF THE CITY OF SALINAS STANDARDS AND SPECIFICATIONS, STANDARD PROPERTY DEVELOPMENT SPECIFICATIONS, AND THE 2010 CALIFORNIA BUILDING CODE AS THEY MAY APPLY.

2. THE CONTRACTOR SHALL NOTIFY THE OWNER AND THE CITY OF SALINAS PERMIT CENTER AND HOLD A PRE-JOB MEETING WITH CITY REPRESENTATIVES AS REQUIRED 72 HOURS PRIOR TO COMMENCING WORK.

3. THE CONTRACTOR SHALL BE FAMILIAR WITH THE PLANS, DETAILS, SPECIFICATIONS AND SITE CONDITIONS PRIOR TO THE START OF CONSTRUCTION.

4. IN THE EVENT THAT THE CONTRACTOR FINDS A CONFLICT OR A DEFICIENCY IN THE PLANS, THE CONTRACTOR SHALL NOTIFY THE ENGINEER, THE OWNER, AND OR THE OWNER'S REPRESENTATIVE(S) IMMEDIATELY.

5. ALL REVISIONS TO THESE PLANS MUST BE APPROVED BY THE PROJECT ENGINEER PRIOR TO THEIR CONSTRUCTION, AND SHALL BE ACCURATELY SHOWN ON DRAWINGS PRIOR TO THE ACCEPTANCE OF THE WORK AS COMPLETE. ANY CHANGES TO OR DEVIATIONS FROM THE PLANS MADE WITHOUT AUTHORIZATION SHALL BE AT THE CONTRACTOR'S SOLE RISK AND SHALL ABSOLVE THE ENGINEER OF ANY AND ALL RESPONSIBILITY ASSOCIATED WITH THE THE CHANGE OR DEVIATION. IN ADDITION TO THE PROJECT ENGINEER, ANY REVISION TO THE PLANS SHALL ALSO BE APPROVED BY THE CITY ENGINEER.

6. THE ENGINEER ASSUMES NO RESPONSIBILITY FOR THE ACCURACY OF THE EXISTING TOPOGRAPHY SHOWN, NOR THE ACCURACY OF THE DELINEATION OF SAID UNDERGROUND UTILITIES, NOR FOR THE EXISTENCE OF OTHER BURIED OBJECTS OR UTILITIES WHICH MAY BE ENCOUNTERED AND ARE NOT SHOWN ON THESE PLANS. THE CONTRACTOR IS HEREBY NOTIFIED THAT, PRIOR TO COMMENCING CONSTRUCTION, THEY ARE RESPONSIBLE FOR CONTACTING THE UTILITY COMPANIES INVOLVED AND REQUESTING A VISUAL VERIFICATION OF THEIR UNDERGROUND UTILITIES AND OR FACILITIES. REPAIR OF DAMAGE TO ANY UNDERGROUND UTILITY OR FACILITY SHALL BE MADE AT THE CONTRACTORS EXPENSE.

7. THE CONTRACTOR SHALL NOTIFY UNDERGROUND SERVICE ALERT AT (800) 227-2600 AT LEAST 48 HOURS PRIOR TO THE START OF WORK TO VERIFY THE LOCATION OF EXISTING UNDERGROUND UTILITIES.

8. THE CONTRACTOR SHALL LEAVE A 24-HOUR EMERGENCY TELEPHONE NUMBER WITH THE CITY OF SALINAS POLICE DEPARTMENT, FIRE DEPARTMENT, AND PRIVATE SECURITY COMPANY (IF APPLICABLE), AND KEEP THEM INFORMED DAILY REGARDING ANY CONSTRUCTION RELATED ACTIVITY IN THE PUBLIC RIGHT-OF-WAY.

9. EXISTING CURB, GUTTER, SIDEWALK, SURVEY MONUMENTS, AND OTHER IMPROVEMENTS THAT ARE DAMAGED OR DISPLACED SHALL BE REPLACED AS DIRECTED BY THE CITY ENGINEER AND OR THE ENGINEER AT THE CONTRACTOR'S EXPENSE, WHETHER SHOWN ON THE PLANS OR NOT, EVEN IF DAMAGE OR DISPLACEMENT WAS NOT CAUSED BY ACTUAL WORK PERFORMED BY THE CONTRACTOR.

10. THE CONTRACTOR SHALL ADJUST TO FINAL GRADE ALL MANHOLES, VALVE AND MONUMENT COVERS WITHIN THE WORK AREA UNLESS NOTED OTHERWISE.

13. THE CONTRACTOR ASSUMES SOLE AND COMPLETE RESPONSIBILITY FOR THE JOB SITE CONDITIONS AND SAFETY OF ALL PERSONS AND PROPERTY DURING THE COURSE OF CONSTRUCTION OF THE PROJECT AND SHALL HOLD HARMLESS, INDEMNIFY AND DEFEND THE OWNER AND THE ENGINEER FROM ANY AND ALL LIABILITY, CLAIMS, LOSSES OR DAMAGES ARISING FROM THE PERFORMANCE OF THE WORK DESCRIBED HEREON EXCEPT THOSE ARISING FROM THE SOLE NEGLIGENCE OF ANY OF THE PREVIOUSLY MENTIONED PEOPLE OR ENTITIES. THIS REQUIREMENT SHALL BE MADE TO APPLY CONTINUOUSLY AND NOT BE LIMITED TO NORMAL WORKING HOURS.

14. CONTRACTOR SHALL BE RESPONSIBLE FOR REMOVAL, OFF-HAUL, AND PROPER DISPOSAL OF ALL ITEMS TO BE REMOVED INCLUDING BUT NOT LIMITED TO: DEBRIS FROM THE SITE, ASPHALT, CONCRETE, TREES, ROOT BALLS AND FENCING.

15. CONSTRUCTION ACTIVITY SHALL BE RESTRICTED TO THE HOURS OF 7:00 AM TO 9:00 PM.

16. CONSTRUCTION EQUIPMENT SHALL HAVE MUFFLERS IN GOOD CONDITION.

17. CONTRACTOR AND ALL SUBCONTRACTORS ARE RESPONSIBLE FOR COMPLIANCE WITH ANY CURRENTLY APPLICABLE SAFETY LAW OF OF ANY JURISDICTIONAL BODY. FOR INFORMATION REGARDING THIS PROVISION, THE CONTRACTOR IS DIRECTED TO CONTACT STATE OF CALIFORNIA DIVISION OF OCCUPATIONAL SAFETY AND HEALTH, SALINAS, CA. PHONE (831) 443-3050.

18. THE CONTRACTOR SHALL BE RESPONSIBLE FOR ALL BARRICADES, SAFETY DEVICES, AND TRAFFIC CONTROL WITHIN THE CONSTRUCTION AREA.

19. A SEPARATE PERMIT IS REQUIRED FOR THE CONSTRUCTION OF ALL RETAINING WALLS.

20. TREES WHICH ARE LOCATED CLOSE TO THE CONSTRUCTION SITE SHALL BE PROTECTED FROM INADVERTENT DAMAGE FROM CONSTRUCTION EQUIPMENT BY WRAPPING TRUNKS WITH PROTECTIVE MATERIALS, AVOIDING FILL OF ANY TYPE AGAINST THE BASE OF TRUNKS AND AVOIDING AN INCREASE IN SOIL DEPTH AT THE FEEDING ZONE OR DRIP LINE OF THE RETAINED TREES.

21. DEBRIS AND OTHER OBJECTIONABLE MATERIAL AS DETERMINED BY THE CITY ENGINEER WITHIN THE PUBLIC RIGHT OF WAY SHALL BE REMOVED IMMEDIATELY.

GRADING NOTES

1. REFER TO GENERAL NOTES AND DETAILS AS SHOWN ON THESE PLANS AND THE PAVEMENT ASSESSMENT LETTER DATED NOVEMBER 16, 2012 PREPARED BY:

EARTH SYSTEMS PACIFIC
1514 MOFFETT STREET, SUITE G
SALINAS, CA 93905
831-422-8547

2. GRADING AND COMPACTION SHALL BE TESTED BY THE GEOTECHNICAL ENGINEER AND/OR GEOTECHNICAL TESTING CONSULTANT, WHO WILL PROVIDE THE ENGINEER WITH COPIES OF ALL TEST RESULTS. THE CONTRACTOR SHALL SUBMIT TESTS AND REPORTS FROM GEOTECHNICAL ENGINEER TO THE CITY PRIOR TO SCHEDULING ANY INSPECTIONS.

3. IT IS THE CONTRACTOR'S RESPONSIBILITY TO SECURE THE REQUIRED PERMITS PRIOR TO THE COMMENCEMENT OF GRADING. RIGHT-OF-ENTRY, PERMISSION TO GRADE, AND ENCROACHMENT PERMIT(S) WILL BE REQUIRED PRIOR TO GRADING, IF THE WORK IS WITHIN THE PUBLIC RIGHT-OF-WAY.

4. IT IS THE CONTRACTORS RESPONSIBILITY TO PREPARE THE GROUND SURFACE TO RECEIVE THE FILLS TO THE SATISFACTION OF THE SOIL ENGINEER AND TO PLACE, SPREAD, MIX, WATER, AND COMPACT THE FILL IN ACCORDANCE WITH THE RECOMMENDATIONS OF THE GEOTECHNICAL ENGINEER. THE CONTRACTOR SHALL ALSO REMOVE ALL MATERIAL CONSIDERED UNSATISFACTORY BY THE GEOTECHNICAL ENGINEER.

5. WHERE UNSTABLE OR UNSUITABLE MATERIALS ARE ENCOUNTERED DURING SUB GRADE PREPARATION, THE AREA IN QUESTION SHALL BE OVER EXCAVATED AND REPLACED BY SELECT BACKFILL MATERIAL AS DIRECTED IN THE FIELD BY THE GEOTECHNICAL ENGINEER.

6. ALL CUT AND FILL SLOPE SHALL BE 2:1 OR FLATTER UNLESS OTHERWISE DIRECTED IN WRITING BY THE ENGINEER OR GEOTECHNICAL ENGINEER AND APPROVED BY THE CITY.

7. ELEVATION BENCHMARK: SEE SHEET C1.

8. CONTRACTOR SHALL USE CAUTION WHEN GRADING AROUND AND/OR OVER EXISTING UNDERGROUND UTILITIES.

9. STRIPPINGS TO BE USED AS TOPSOIL SHALL BE STOCKPILED IN APPROVED AREAS FOR FUTURE USE IN LANDSCAPED AREAS.

10. IF CULTURAL, ARCHAEOLOGICAL, HISTORICAL, OR PALEONTOLOGICAL RESOURCES ARE UNCOVERED DURING CONSTRUCTION, WORK SHALL BE STOPPED IMMEDIATELY WITHIN 165 FT OF THE FIND UNTIL A QUALIFIED PROFESSIONAL ARCHAEOLOGIST CAN EVALUATE IT. THE CITY ENGINEER AND A QUALIFIED ARCHAEOLOGIST SHALL BE IMMEDIATELY CONTACTED BY THE RESPONSIBLE INDIVIDUAL PRESENT ON SITE. WHEN CONTACTED, THE CITY ENGINEER AND THE ARCHAEOLOGIST SHALL IMMEDIATELY VISIT THE SITE TO DETERMINE THE EXTENT OF RESOURCES AND TO DEVELOP PROPER MITIGATION MEASURES REQUIRED FOR THE DISCOVERY.

11. ALL GRADES TO BE A MINIMUM OF 5% AWAY FROM FOUNDATIONS FOR A MINIMUM OF 10 FEET MEASURED PERPENDICULAR TO THE FACE OF THE WALL.
a. IF BUILDING SITE DOES NOT ALLOW 10 FEET OF SLOPE, PROVIDE A MINIMUM 5% GRADE SLOPE TO AN APPROVED DIVERSION STRUCTURE OR
b. INDICATE SWALES OR IMPERVIOUS SURFACES WITHIN 10 FEET OF THE FOUNDATION WITH A MINIMUM 2% SLOPE AWAY FROM THE BUILDING.

12. TREE REMOVAL SHALL INCLUDE REMOVAL OF TRUNKS, STUMPS, AND ROOTBALLS. THE REMAINING CAVITY SHALL BE CLEARED OF ALL ROOTS LARGER THAN ½" TO A DEPTH OF NOT LESS THAN 18" AND BACKFILLED WITH SUITABLE MATERIAL IN 6" LOOSE LIFTS AND COMPACTED TO 90% MINIMUM RELATIVE COMPACTION.

13. PAD ELEVATIONS SHALL BE CERTIFIED TO 0.1 FEET, PRIOR TO DIGGING ANY FOOTINGS OR SCHEDULING ANY INSPECTIONS.

14. GROUND SURFACE SHALL BE PREPARED TO RECEIVE FILL BY REMOVING VEGETATION, TOPSOIL AND OTHER UNSUITABLE MATERIALS TO PROVIDE A BOND WITH THE NEW FILL, AND WHERE SLOPES ARE STEEPER THAN 6 TO 1, AND THE HEIGHT IS GREATER THAN 5 FT, BY BENCHING/KEYING INTO SOUND BEDROCK OR OTHER COMPETENT MATERIAL AS DETERMINED BY THE GEOTECHNICAL ENGINEER. (SEE GEOTECHNICAL REPORT)

15. NO ORGANIC MATERIAL SHALL BE PERMITTED IN FILLS EXCEPT AS TOPSOIL USED FOR SURFACE PLANT GROWTH ONLY AND WHICH DOES NOT EXCEED 2" IN DEPTH. NO ROCK OVER 2" IN ITS MAXIMUM DIMENSION MAY BE USED IN A FILL.

16. PRIOR TO FINAL INSPECTION, THE GEOTECHNICAL CONSULTANT SHALL PROVIDE CERTIFICATION THAT ALL DEVELOPMENT HAS BEEN CONSTRUCTED IN ACCORDANCE WITH THE GEOTECHNICAL REPORT.

17. ALL FILL SOILS SHALL BE COMPACTED IN ACCORDANCE WITH THE GEOTECHNICAL REPORT. (MINIMUM 90%)

18. 100% OF TREES, STUMPS, ROCKS AND ASSOCIATED VEGETATION AND SOILS PRIMARILY FROM LAND CLEARING SHALL BE REUSED OR RECYCLED.

EROSION CONTROL NOTES

1. NO GRADING OPERATIONS SHALL BE CONDUCTED DURING THE RAINY SEASON (OCTOBER 1 - APRIL 30) EXCEPT UPON CLEAR DEMONSTRATION, TO THE SATISFACTION OF THE CITY ENGINEER, THAT ADEQUATE SITE EROSION CONTROL MEASURES ARE TO BE TAKEN TO MINIMIZE RISK OF INCREASED EROSION AND SEDIMENT DISCHARGE FROM THE SITE.

2. SHOULD GRADING BE PERMITTED DURING THE RAINY SEASON, THE SMALLEST PRACTICABLE AREA OF ERODIBLE LAND SHALL BE EXPOSED AT ANY ONE TIME DURING GRADING OPERATION AND THE TIME OF EXPOSURE SHALL BE MINIMIZED.

3. NATURAL FEATURES, INCLUDING VEGETATION, TERRAIN, WATERCOURSES AND SIMILAR RESOURCES SHALL BE PRESERVED WHEREVER POSSIBLE.

4. PERMANENT VEGETATION AND STRUCTURES FOR EROSION AND SEDIMENT CONTROL SHALL BE INSTALLED PRIOR TO OCTOBER 15TH. A LONG TERM MAINTENANCE SCHEDULE SHALL BE IN PLACE.

5. RUNOFF SHALL NOT BE DISCHARGED FROM THE SITE IN QUANTITIES OR AT VELOCITIES SUBSTANTIALLY ABOVE THOSE WHICH OCCURRED BEFORE GRADING EXCEPT INTO DRAINAGE FACILITIES WHOSE DESIGN HAS BEEN SPECIFICALLY APPROVED BY THE CITY ENGINEER.

6. CONTRACTOR SHALL IMPLEMENT BMPS TO ENSURE THAT VEHICLES DO NOT TRACK OR SPILL EARTH MATERIALS INTO PUBLIC STREETS AND SHALL IMMEDIATELY REMOVE SUCH MATERIALS IF THIS OCCURS.

7. SHOULD INCREASED EROSION OR SEDIMENT DISCHARGE OCCUR OR BECOME IMMINENT, CONTRACTOR SHALL TAKE ALL NECESSARY STEPS TO CONTROL SUCH DISCHARGE. SUCH STEPS MAY INCLUDE CONSTRUCTION OF ADDITIONAL FACILITIES OR REMOVAL OR ALTERATION OF FACILITIES REQUIRED BY APPROVED EROSION AND SEDIMENT CONTROL PLANS. FACILITIES REMOVED OR ALTERED SHALL BE RESTORED AS SOON AS POSSIBLE AFTERWARD OR APPROPRIATE CHANGES IN THE PLAN SHALL BE IMMEDIATELY IMPLEMENTED. CONTRACTOR SHALL TAKE PROMPT ACTION TO RESOLVE EMERGENCY PROBLEMS.

8. THE CONTRACTOR SHALL TAKE ALL NECESSARY MEASURES TO PREVENT AIRBORNE DUST FROM BECOMING A NUISANCE TO NEIGHBORING PROPERTIES. THE CONTRACTOR SHALL CONFORM TO THE STANDARDS FOR DUST-CONTROL AS ESTABLISHED BY THE MONTEREY BAY UNIFIED AIR POLLUTION CONTROL DISTRICT. DUST CONTROL MEASURES TO BE IMPLEMENTED INCLUDE BUT ARE NOT LIMITED TO THE FOLLOWING:

A) PROVIDE EQUIPMENT AND MANPOWER REQUIRED FOR WATERING ALL EXPOSED OR DISTURBED EARTH. SUFFICIENT WATERING TO CONTROL DUST IS REQUIRED AT ALL TIMES. WATER ALL ACTIVE AREAS AT LEAST TWICE DAILY, OR AS REQUIRED BY THE CITY ENGINEER TO CONTROL DUST.
B) COVER STOCKPILES OF DEBRIS, SOIL, OR OTHER MATERIALS WHICH MAY CONTRIBUTE TO AIRBORNE DUST. COVER ALL TRUCKS HAULING DIRT< SAND OR LOOSE SOIL MATERIAL. HAUL TRUCKS SHALL MAINTAIN AT LEAST 2 FT FREEBOARD.
C) KEEP CONSTRUCTION AREAS AND ADJACENT STREET FREE OF MUD AND DUST.
D) APPLY NON-TOXIC, CHEMICAL SOIL STABILIZERS ON ALL UNPAVED ACCESS ROADS, PARKING AREAS, AND STAGING AREAS AS WELL AS ON DISTURBED AREAS WITHIN THE PROJECT THAT ARE UNUSED FOR AT LEAST 4 CONSECUTIVE DAYS.
E) LANDSCAPE, SEED, OR COVER PORTIONS OF THE SITE AS SOON AS CONSTRUCTION IS COMPLETE.

THE CONTRACTOR SHALL ASSUME LIABILITY FOR CLAIMS RELATED TO WIND BLOWN MATERIAL. IF THE DUST CONTROL IS INADEQUATE AS DETERMINED BY THE CITY ENGINEER, THE CONSTRUCTION WORK SHALL BE TERMINATED UNTIL CORRECTIVE MEASURES ARE TAKEN.

NO.	DATE	DESCRIPTION	BY

LEGEND

- EXISTING CURB
- 200 — EXISTING MAJOR CONTOUR
- EXISTING MINOR CONTOUR
- EXISTING STORM DRAIN
- 200 — DESIGN MAJOR CONTOUR
- DESIGN MINOR CONTOUR
- NEW SAWCUT
- NEW CURB
- IW — NEW INDUSTRIAL WASTE
- SD — NEW STORM DRAIN
- NEW CONCRETE
- NEW ASPHALT
- STABILIZED RECYCLED AGGREGATE ACCESS ROAD
- STABILIZED NATIVE MATERIAL
- NEW BIO-FILTRATION PLANTER
- ACCESSIBLE PATH OF TRAVEL

SYMBOLS

- EXISTING SPOT GRADE
- FIRE HYDRANT
- VALVE (AS NOTED)
- VAULT (AS NOTED)
- 957 DESIGN SPOT ELEVATION
- MANHOLE

STATEMENT OF PURPOSE

GRADING, DRAINAGE AND EROSION CONTROL PLANS FOR THE PAVEMENT IMPROVEMENTS TO TAYLOR FARMS AT 745 AIRPORT BLVD.

ESTIMATED SCHEDULE

SEPTEMBER 2014 - JANUARY 2015

ESTIMATED EARTHWORK

(QUANTITIES TO FINISH GRADE)
CUT=380cy
FILL=30cy
NET=350 cy CUT

SHEET INDEX

C1	TITLE SHEET
C2	DEMOLITION PLAN
C3	SITE AND UTILITY PLAN
C4	GRADING AND DRAINAGE PLAN
C5	EROSION CONTROL PLAN
C6	CONSTRUCTION DETAILS
C7	CONSTRUCTION DETAILS
L1	LANDSCAPE PLAN

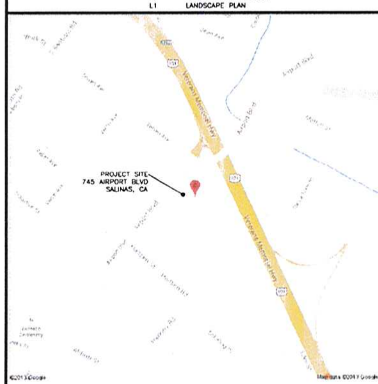

VICINITY MAP

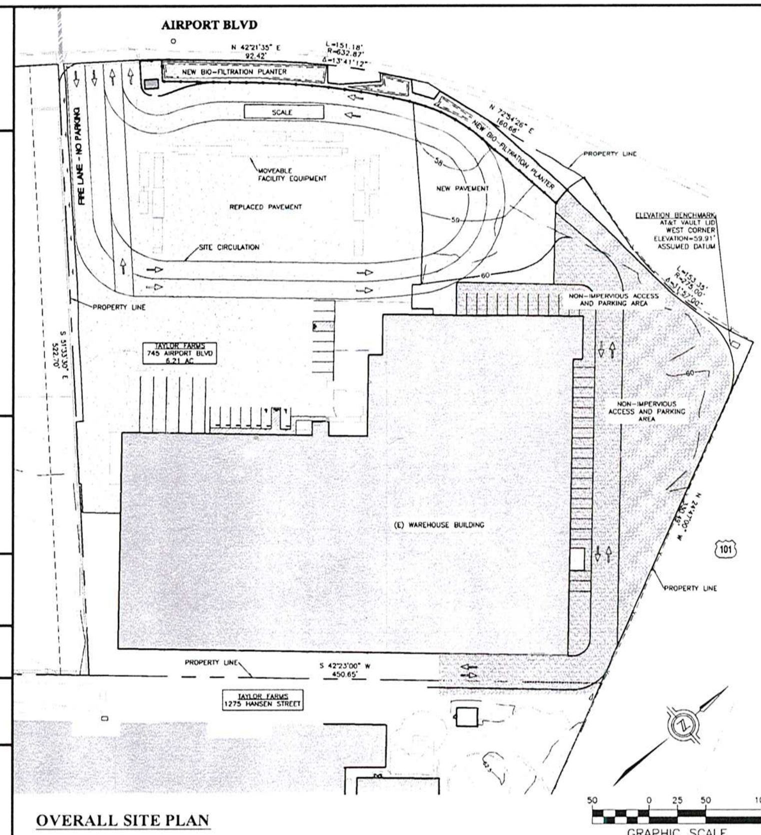

OVERALL SITE PLAN

ABBREVIATIONS

AB	AGGREGATE BASE	FP	FINISH PAVING GRADE	PRVCS	POINT OF REVERSE VERTICAL CURVE STATION
AC	ASPHALT CONCRETE	FS	FINISH SURFACE GRADE	PVC	POLYVINYL CHLORIDE
AWWA	AMERICAN WATER WORKS ASSOCIATION	GB	GRADE BREAK	R	RIGHT
BC	BEGIN CURVE	GR	GRATE	RAD	RADIUS
BLDG	BUILDING	GV	GAS VALVE	RP	RADIUS POINT
BVC	BEGIN VERTICAL CURVE	HI	HIGH	R/W	RIGHT OF WAY
BVCE	BEGIN VERTICAL CURVE ELEV	HDPE	HIGH DENSITY POLYETHYLENE PIPE	RCP	REINFORCED CONCRETE PIPE
BVCS	BEGIN VERTICAL CURVE STA	HORIZ	HORIZONTAL	RD	ROOF DRAIN
CAL TRANS	CALIFORNIA DEPARTMENT OF TRANSPORTATION	INV	INVERT	REBAR	REINFORCING BAR
CB	CATCH BASIN	JB	JUNCTION BOX	RET	RETAINING
C/L	CENTERLINE	K	CURVE COEFFICIENT	S	SLOPE
CL	CLASS	L	LEFT	SD	STORM DRAIN
CO	COMPANY	LF	LINEAR FEET	SDMH	STORM DRAIN MANHOLE
CONC	CONCRETE	LIP	LIP OF GUTTER GRADE	SHT	SHEET
CU	COPPER	LO	LOW	SIM	SIMILAR
DI	DROP INLET	MAX	MAXIMUM	SS	STAINLESS STEEL
DIA	DIAMETER	M.E.	MATCH EXISTING GRADE	SS	SANITARY SEWER
D.S.	DOWN SPOUT	MH	MANHOLE	SSCO	SANITARY SEWER CLEAN OUT
DWY	DRIVEWAY	MIL	MILLIMETER	SSFM	SANITARY SEWER FORCE MAIN
(E)	EXISTING	MIN	MINIMUM	SSMH	SANITARY SEWER MANHOLE
EC	END CURVE	N/A	NOT APPLICABLE	STA	STATION
ECR	END CURVE RETURN	(N)	NEW	SUB	SUBFLOOR ELEVATION
EL	ELEVATION	NO	NUMBER	TC	TOP OF CURB
ELEV	ELEVATION	NTS	NOT TO SCALE	TD	TOP OF DIKE
EP	EDGE OF PAVEMENT	#	NUMBER, WIRE SIZE	TELE	TELEPHONE
EVC	END VERTICAL CURVE	PCVCE	POINT OF COMPOUND VERTICAL CURVE ELEVATION	TV	TELEVISION
EVCE	END VERTICAL CURVE ELEV	PCVCS	POINT OF COMPOUND VERTICAL CURVE STATION	TW	TOP OF WALL
EVCS	END VERTICAL CURVE STA	PG	PAGE	(TYP)	TYPICAL
FF	FINISH FLOOR ELEVATION	PG&E	PACIFIC GAS AND ELECTRIC COMPANY	UTIL	UTILITY
FG	FINISH GROUND	PI	POINT OF INTERSECTION	VC	VERTICAL CURVE
FL	FLOW LINE	P/L	PROPERTY LINE	VERT	VERTICAL
FNC	FENCE	PT	POINT	VOL	VOLUME
		PRVCE	POINT OF REVERSE VERTICAL CURVE ELEVATION	WV	WATER VALVE
				W/	WITH

L&S ENGINEERING AND SURVEYING, INC
2460 Garden Road Suite G Monterey California 93940
P: 831 655 2723 F: 831 655 3425
LandSengineers.com

REGISTERED PROFESSIONAL ENGINEER
MARK R. STERNER
No. 69930
EXP. 9-30-16
CIVIL
STATE OF CALIFORNIA

DRAWN BY: JPR
DESIGNED BY: JPR
DATE: 10-28-13
SCALE: AS NOTED
JOB NUMBER: 12-074
LAST REVISED: 10-15-14
REVISED BY: MRS

TITLE SHEET

IMPROVEMENT PLANS
TAYLOR FARMS
745 AIRPORT BLVD
SALINAS, CA
APN 003-692-008

C1

Exhibit B

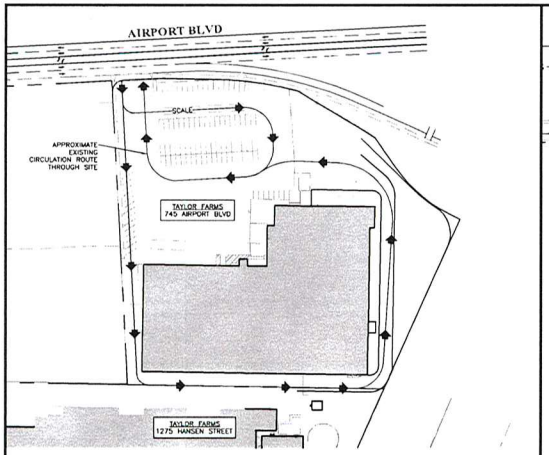

B C2 **EXISTING SITE CIRCULATION**

SCALE: 1"=100'

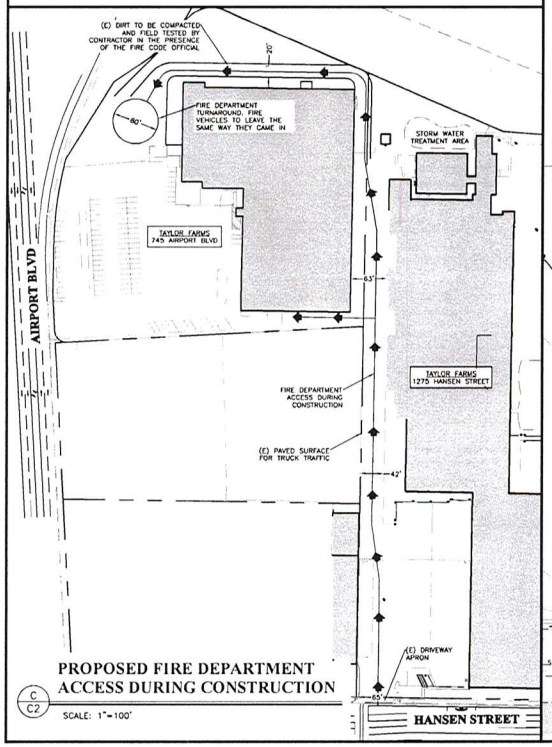

C C2 **PROPOSED FIRE DEPARTMENT ACCESS DURING CONSTRUCTION**

SCALE: 1"=100'

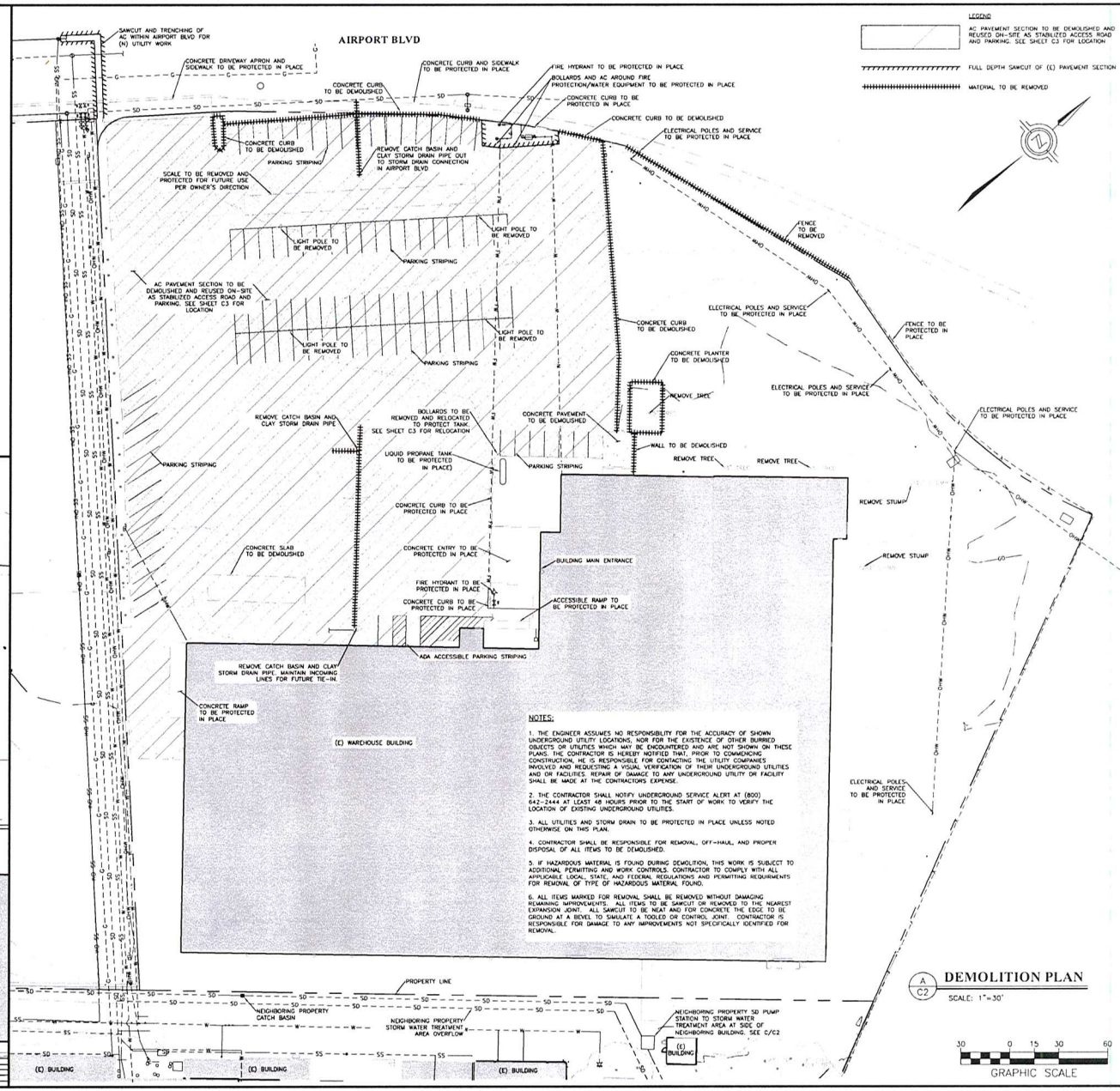

A C2 **DEMOLITION PLAN**

SCALE: 1"=30'

LEGEND

AC PAVEMENT SECTION TO BE DEMOLISHED AND REUSED ON-SITE AS STABILIZED ACCESS ROAD AND PARKING. SEE SHEET C3 FOR LOCATION

FULL DEPTH SAWCUT OF (E) PAVEMENT SECTION

MATERIAL TO BE REMOVED

NOTES:

1. THE ENGINEER ASSUMES NO RESPONSIBILITY FOR THE ACCURACY OF SHOWN UNDERGROUND UTILITY LOCATIONS, NOR FOR THE EXISTENCE OF OTHER BURRIED OBJECTS OR UTILITIES WHICH MAY BE ENCOUNTERED AND ARE NOT SHOWN ON THESE PLANS. THE CONTRACTOR IS HEREBY NOTIFIED THAT, PRIOR TO COMMENCING CONSTRUCTION, HE IS RESPONSIBLE FOR CONTACTING THE UTILITY COMPANIES INVOLVED AND REQUESTING A VISUAL VERIFICATION OF THEIR UNDERGROUND UTILITIES AND OR FACILITIES. REPAIR OF DAMAGE TO ANY UNDERGROUND UTILITY OR FACILITY SHALL BE MADE AT THE CONTRACTORS EXPENSE.

2. THE CONTRACTOR SHALL NOTIFY UNDERGROUND SERVICE ALERT AT (800) 642-2444 AT LEAST 48 HOURS PRIOR TO THE START OF WORK TO VERIFY THE LOCATION OF EXISTING UNDERGROUND UTILITIES.

3. ALL UTILITIES AND STORM DRAIN TO BE PROTECTED IN PLACE UNLESS NOTED OTHERWISE ON THIS PLAN.

4. CONTRACTOR SHALL BE RESPONSIBLE FOR REMOVAL, OFF-HAUL, AND PROPER DISPOSAL OF ALL ITEMS TO BE DEMOLISHED.

5. IF HAZARDOUS MATERIAL IS FOUND DURING DEMOLITION, THIS WORK IS SUBJECT TO ADDITIONAL PERMITTING AND WORK CONTROLS. CONTRACTOR TO COMPLY WITH ALL APPLICABLE LOCAL, STATE, AND FEDERAL REGULATIONS AND PERMITTING REQUIREMENTS FOR REMOVAL OF TYPE OF HAZARDOUS MATERIAL FOUND.

6. ALL ITEMS MARKED FOR REMOVAL SHALL BE REMOVED WITHOUT DAMAGING REMAINING IMPROVEMENTS. ALL ITEMS TO BE SAWCUT OR REMOVED TO THE NEAREST EXPANSION JOINT. ALL SAWCUT TO BE NEAT AND FOR CONCRETE THE EDGE TO BE GROUND AT A BEVEL TO SIMULATE A TOOLED OR CONTROL JOINT. CONTRACTOR IS RESPONSIBLE FOR DAMAGE TO ANY IMPROVEMENTS NOT SPECIFICALLY IDENTIFIED FOR REMOVAL.

L&S ENGINEERING AND SURVEYING, INC.
2300 Q Del Rio Road, Suite 1
P.O. Box 3242, Salinas, CA 93912
P: 831.758.7722 F: 831.758.7723
LandSengineers.com

REGISTERED PROFESSIONAL ENGINEER
MARK R. STEVENS
No. 69930
EXP. 9-30-16
CIVIL
STATE OF CALIFORNIA

DRAWN BY:	JPR
DESIGNED BY:	JPR
DATE:	10-28-13
SCALE:	AS NOTED
JOB NUMBER:	12-474
LAST REVISED:	10-15-14
REVISED BY:	MKS

DEMOLITION PLAN

IMPROVEMENT PLANS
TAYLOR FARMS
745 AIRPORT BLVD
SALINAS, CA
APN 003-692-008

C2

Exhibit C

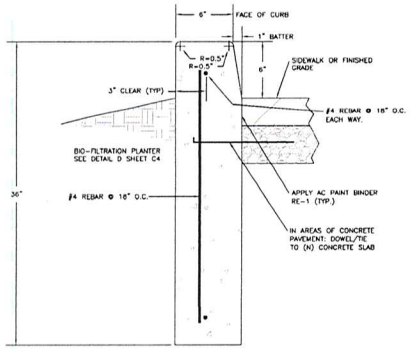

NOTES:
1. ALL WORK SHALL BE DONE IN ACCORDANCE WITH SECTION 73 OF THE CITY OF SALINAS STANDARD SPECIFICATIONS.
2. CLASS "A" CONCRETE PER CITY STANDARD SPECIFICATIONS SHALL BE USED.

B/C3 6" HIGH EXTENDED CURB

NTS

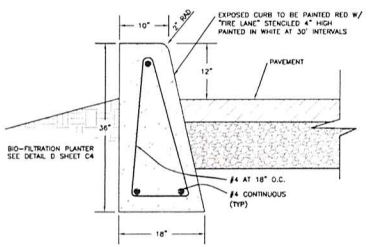

C/C3 12" HIGH TRUCK CURB

NTS

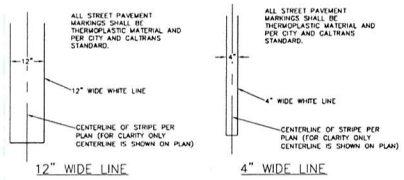

12" WIDE LINE 4" WIDE LINE

D/C3 SITE PARKING STRIPING

NTS

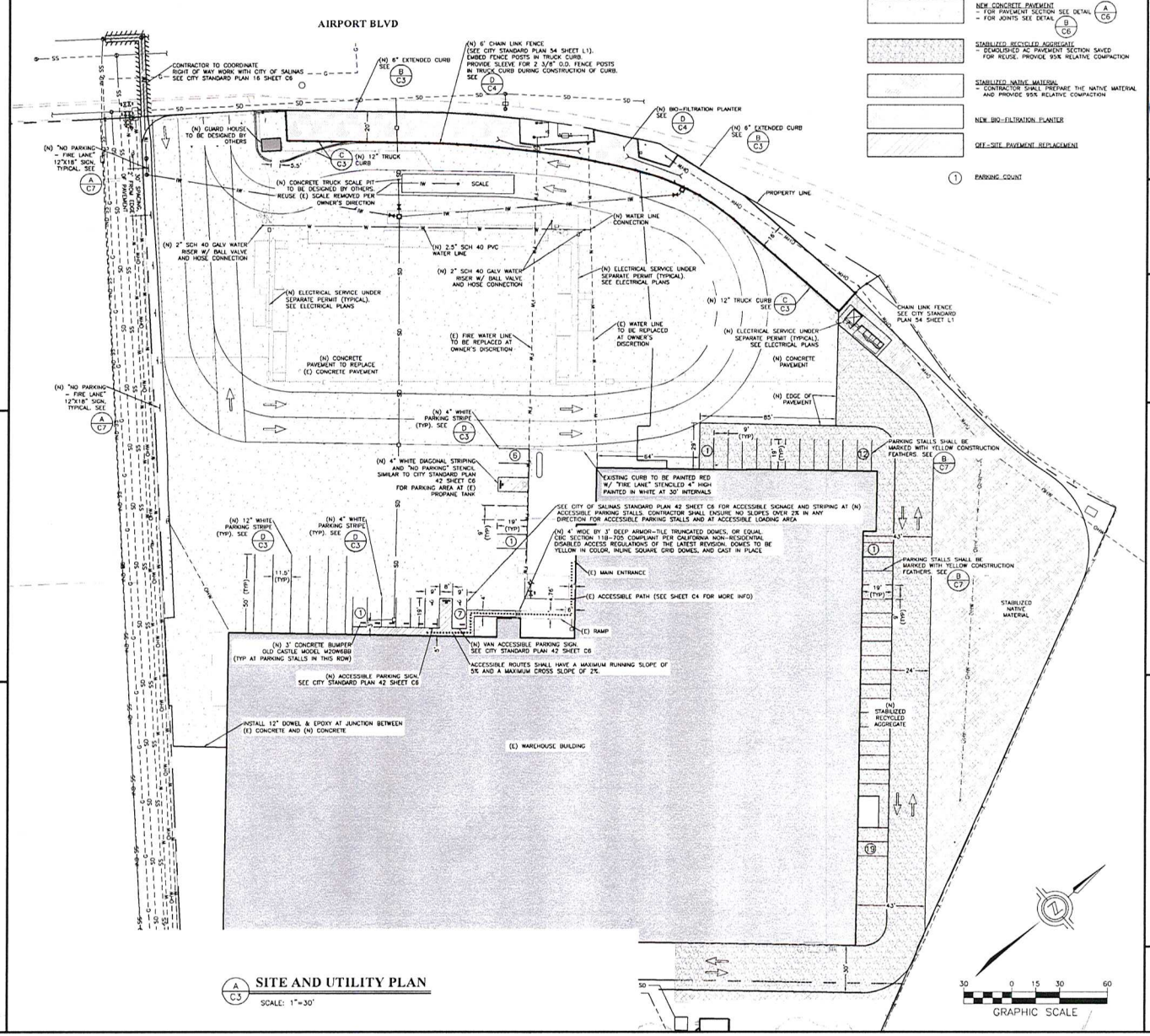

A/C3 SITE AND UTILITY PLAN

SCALE: 1"=30'

L&S ENGINEERING AND SURVEYING, INC.

MARK R. STERNER REGISTERED PROFESSIONAL ENGINEER No. 69930 EXP. 9-30-16 CIVIL STATE OF CALIFORNIA

DRAWN BY:	JPR
DESIGNED BY:	JPR
DATE:	10-28-13
SCALE:	AS NOTED
JOB NUMBER:	12-074
LAST REVISED:	10-15-14
REVISED BY:	MRS

SITE AND UTILITY PLAN

IMPROVEMENT PLANS
TAYLOR FARMS
745 AIRPORT BLVD
SALINAS, CA
APN 003-692-008

C3

Exhibit D

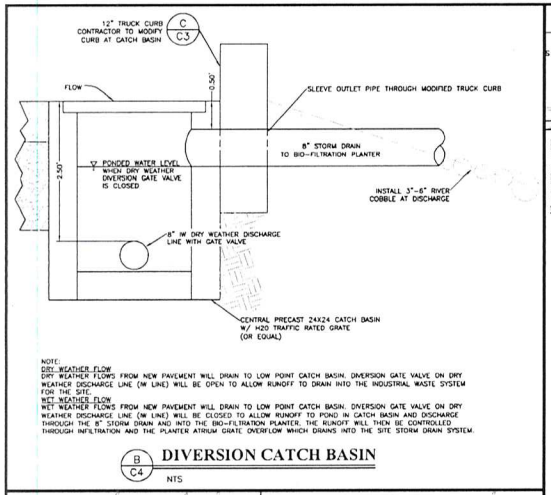

NOTE:
DRY WEATHER FLOW
DRY WEATHER FLOWS FROM NEW PAVEMENT WILL DRAIN TO LOW POINT CATCH BASIN. DIVERSION GATE VALVE ON DRY WEATHER DISCHARGE LINE (IW LINE) WILL BE OPEN TO ALLOW RUNOFF TO DRAIN INTO THE INDUSTRIAL WASTE SYSTEM FOR THE SITE.
WET WEATHER FLOW
WET WEATHER FLOWS FROM NEW PAVEMENT WILL DRAIN TO LOW POINT CATCH BASIN. DIVERSION GATE VALVE ON DRY WEATHER DISCHARGE LINE (IW LINE) WILL BE CLOSED TO ALLOW RUNOFF TO POND IN CATCH BASIN AND DISCHARGE THROUGH THE 8" STORM DRAIN AND INTO THE BIO-FILTRATION PLANTER. THE RUNOFF WILL THEN BE CONTROLLED THROUGH INFILTRATION AND THE PLANTER ATRIUM GRATE. OVERFLOW WHICH DRAINS INTO THE SITE STORM DRAIN SYSTEM.

B C4 DIVERSION CATCH BASIN

NTS

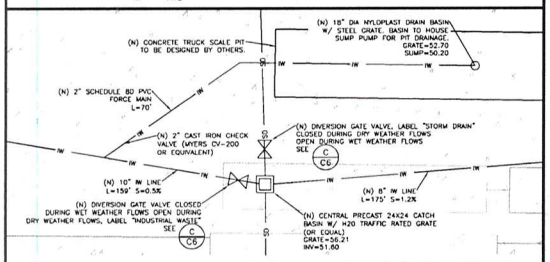

C C4 STORM DRAIN / INDUSTRIAL WASTE SYSTEM DETAIL

SCALE: 1"=10'

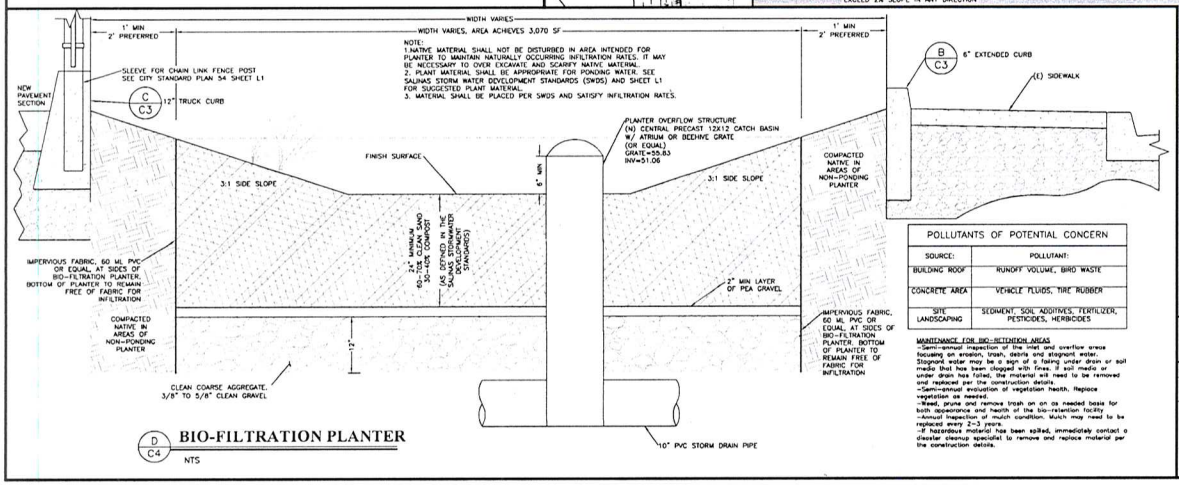

NOTE:
1. NATIVE MATERIAL SHALL NOT BE DISTURBED IN AREA INTENDED FOR PLANTER TO MAINTAIN NATURALLY OCCURRING INFILTRATION RATES. IT MAY BE NECESSARY TO OVER EXCAVATE AND SCARIFY NATIVE MATERIAL.
2. PLANT MATERIAL SHALL BE APPROPRIATE FOR PONDING WATER. SEE SALINAS STORM WATER DEVELOPMENT STANDARDS (SWDS) AND SHEET L1 FOR SUGGESTED PLANT MATERIAL.
3. MATERIAL SHALL BE PLACED PER SWDS AND SATISFY INFILTRATION RATES.

D C4 BIO-FILTRATION PLANTER

NTS

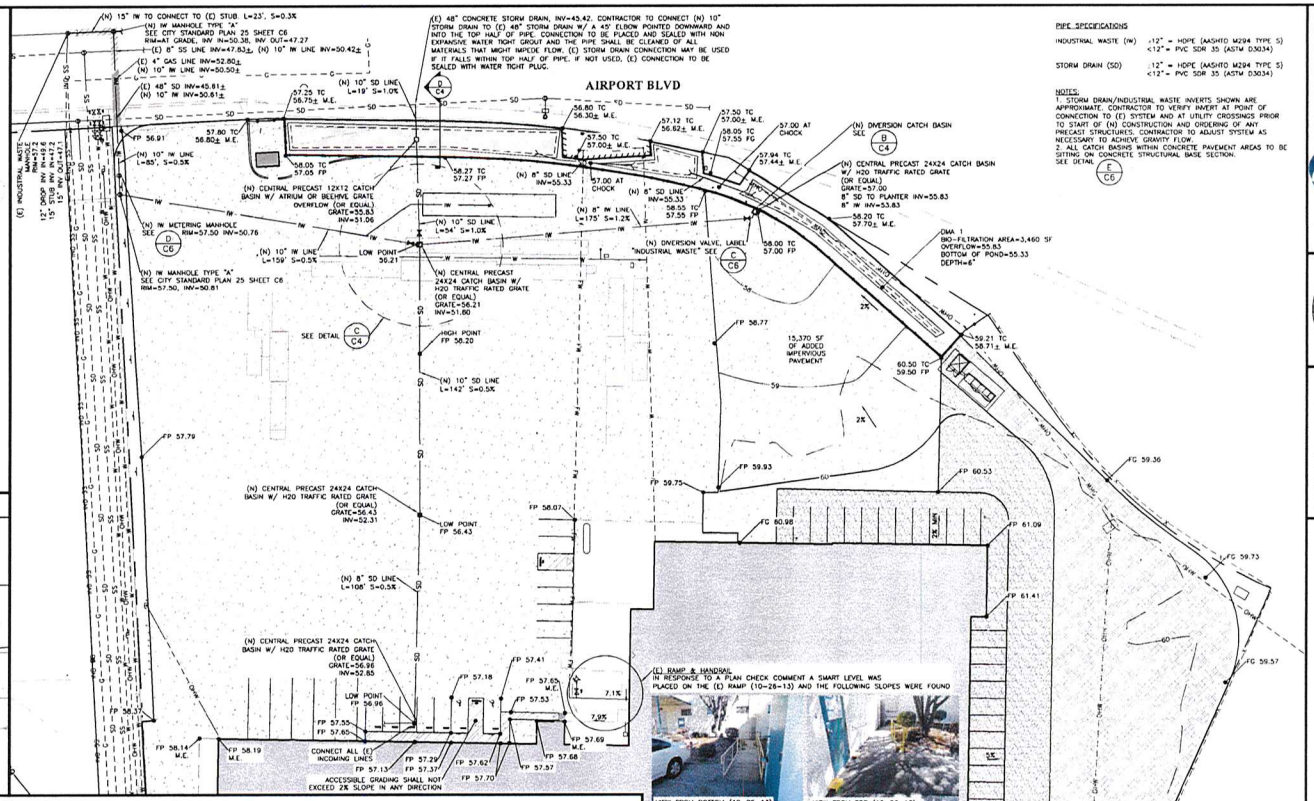

PIPE SPECIFICATIONS

INDUSTRIAL WASTE (IW) :12" = HDPE (AASHTO M294 TYPE S)
<12" = PVC SDR 35 (ASTM D3034)

STORM DRAIN (SD) :12" = HDPE (AASHTO M294 TYPE S)
<12" = PVC SDR 35 (ASTM D3034)

NOTES:
1. STORM DRAIN/INDUSTRIAL WASTE INVERTS SHOWN ARE APPROXIMATE. CONTRACTOR TO VERIFY INVERT AT POINT OF CONNECTION TO (E) SYSTEM AND AT UTILITY CROSSINGS PRIOR TO START OF (N) CONSTRUCTION AND ORDERING OF ANY PRECAST STRUCTURES. CONTRACTOR TO ADJUST SYSTEM AS NECESSARY TO ACHIEVE GRAVITY FLOW.
2. ALL CATCH BASINS WITHIN CONCRETE PAVEMENT AREAS TO BE SITTING ON CONCRETE STRUCTURAL BASE SECTION. SEE DETAIL E C6

(E) RAMP & HANDRAIL
IN RESPONSE TO A PLAN CHECK COMMENT A SMART LEVEL WAS PLACED ON THE (E) RAMP (10-26-13) AND THE FOLLOWING SLOPES WERE FOUND

POLLUTANTS OF POTENTIAL CONCERN	
SOURCE:	POLLUTANT:
BUILDING ROOF	RUNOFF VOLUME, BIRD WASTE
CONCRETE AREA	VEHICLE FLUIDS, TIRE RUBBER
SITE LANDSCAPING	SEDIMENT, SOIL ADDITIVES, FERTILIZER, PESTICIDES, HERBICIDES

MAINTENANCE FOR BIO-RETENTION AREAS
-Semi-annual inspection of the inlet and overflow areas focusing on erosion, trash, debris and stagnant water. Stagnant water may be a sign of a failing under drain or soil media that has been clogged with fines. If soil media or under drain has failed, the material will need to be removed and replaced per the construction details.
-Semi-annual evaluation of vegetation health. Replace vegetation as needed.
-Weed, prune and remove trash on an as needed basis for both appearance and health of the bio-retention facility.
-Annual inspection of mulch condition. Mulch may need to be replaced every 2-3 years.
-If hazardous material has been spilled, immediately contact a disaster cleanup specialist to remove and replace material per the construction details.

A C4 GRADING AND DRAINAGE PLAN

SCALE: 1"=30'

L&S ENGINEERING AND SURVEYING, INC
2565 Garden Road, Suite E Monterey, California 93940
P: 831.655.2721 F: 831.655.3425
LandSengineers.com

REGISTERED PROFESSIONAL ENGINEER
MARK R. STERN
No. 69930
EXP. 9-30-16
CIVIL
STATE OF CALIFORNIA

DRAWN BY: JPR
DESIGNED BY: JPR
DATE: 10-28-13
SCALE: AS NOTED
JOB NUMBER: 12-874
LAST REVISED: 10-15-14
REVISED BY: MRS

GRADING AND DRAINAGE PLAN

IMPROVEMENT PLANS
TAYLOR FARMS
745 AIRPORT BLVD
SALINAS, CA
APN 003-692-008

C4

Exhibit E

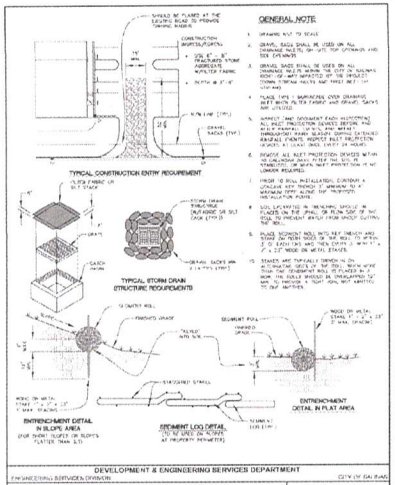

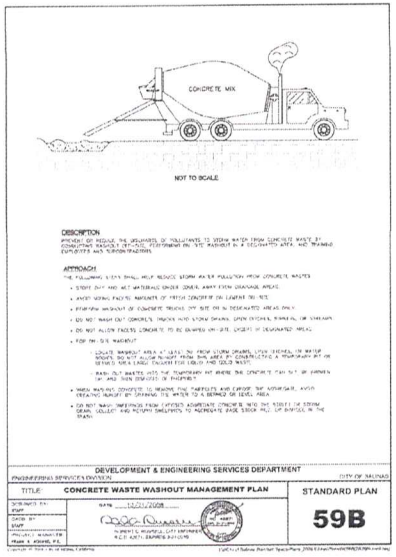

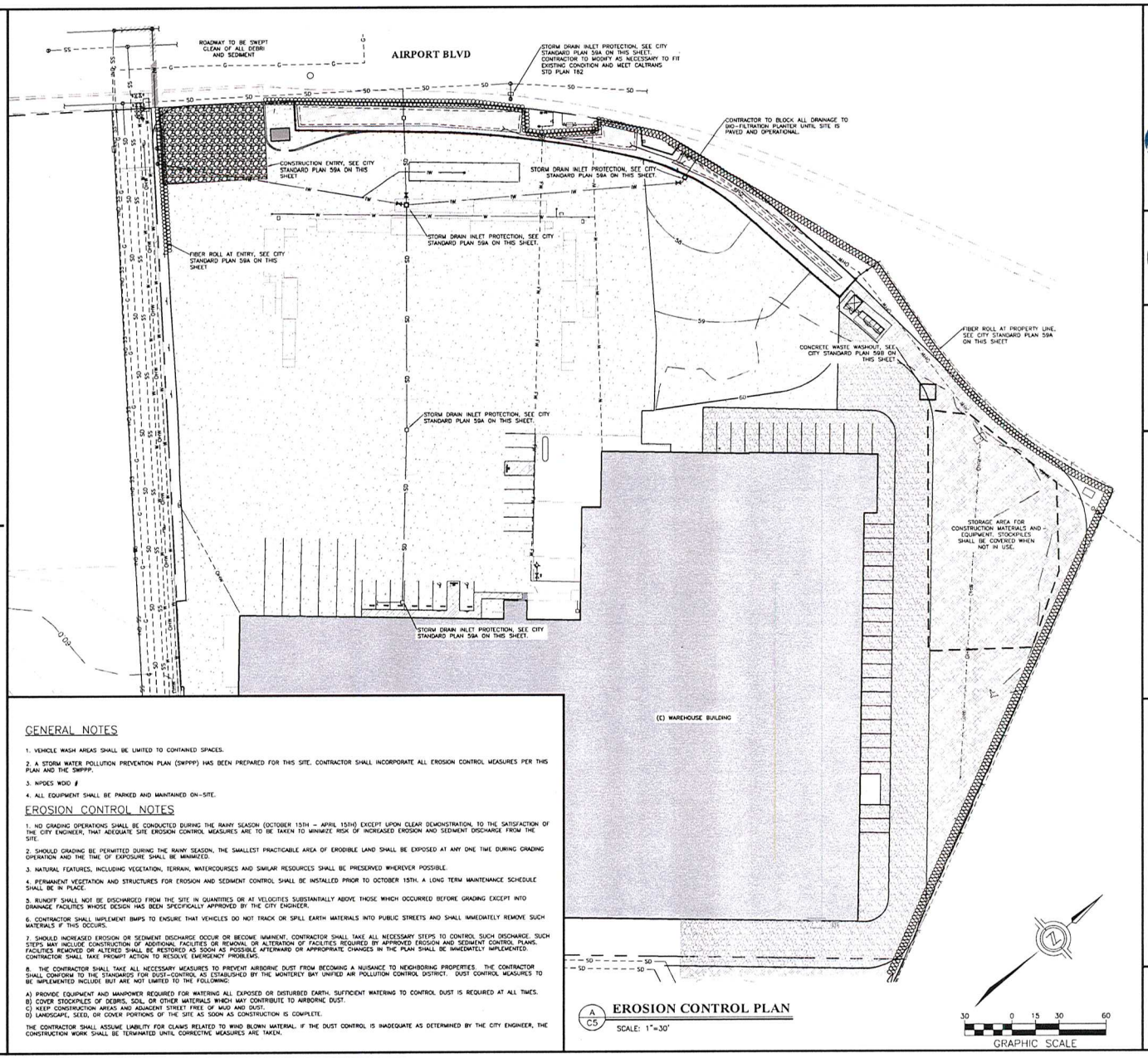

GENERAL NOTES

1. VEHICLE WASH AREAS SHALL BE LIMITED TO CONTAINED SPACES.

2. A STORM WATER POLLUTION PREVENTION PLAN (SWPPP) HAS BEEN PREPARED FOR THIS SITE. CONTRACTOR SHALL INCORPORATE ALL EROSION CONTROL MEASURES PER THIS PLAN AND THE SWPPP.

3. NPDES WDID #

4. ALL EQUIPMENT SHALL BE PARKED AND MAINTAINED ON-SITE.

EROSION CONTROL NOTES

1. NO GRADING OPERATIONS SHALL BE CONDUCTED DURING THE RAINY SEASON (OCTOBER 15TH – APRIL 15TH) EXCEPT UPON CLEAR DEMONSTRATION, TO THE SATISFACTION OF THE CITY ENGINEER, THAT ADEQUATE SITE EROSION CONTROL MEASURES ARE TO BE TAKEN TO MINIMIZE RISK OF INCREASED EROSION AND SEDIMENT DISCHARGE FROM THE SITE.

2. SHOULD GRADING BE PERMITTED DURING THE RAINY SEASON, THE SMALLEST PRACTICABLE AREA OF ERODIBLE LAND SHALL BE EXPOSED AT ANY ONE TIME DURING GRADING OPERATION AND THE TIME OF EXPOSURE SHALL BE MINIMIZED.

3. NATURAL FEATURES, INCLUDING VEGETATION, TERRAIN, WATERCOURSES AND SIMILAR RESOURCES SHALL BE PRESERVED WHEREVER POSSIBLE.

4. PERMANENT VEGETATION AND STRUCTURES FOR EROSION AND SEDIMENT CONTROL SHALL BE INSTALLED PRIOR TO OCTOBER 15TH. A LONG TERM MAINTENANCE SCHEDULE SHALL BE IN PLACE.

5. RUNOFF SHALL NOT BE DISCHARGED FROM THE SITE IN QUANTITIES OR AT VELOCITIES SUBSTANTIALLY ABOVE THOSE WHICH OCCURRED BEFORE GRADING EXCEPT INTO DRAINAGE FACILITIES WHOSE DESIGN HAS BEEN SPECIFICALLY APPROVED BY THE CITY ENGINEER.

6. CONTRACTOR SHALL IMPLEMENT BMPS TO ENSURE THAT VEHICLES DO NOT TRACK OR SPILL EARTH MATERIALS INTO PUBLIC STREETS AND SHALL IMMEDIATELY REMOVE SUCH MATERIALS IF THIS OCCURS.

7. SHOULD INCREASED EROSION OR SEDIMENT DISCHARGE OCCUR OR BECOME IMMINENT, CONTRACTOR SHALL TAKE ALL NECESSARY STEPS TO CONTROL SUCH DISCHARGE. SUCH STEPS MAY INCLUDE CONSTRUCTION OF ADDITIONAL FACILITIES OR REMOVAL OR ALTERATION OF FACILITIES REQUIRED BY APPROVED EROSION AND SEDIMENT CONTROL PLANS. FACILITIES REMOVED OR ALTERED SHALL BE RESTORED AS SOON AS POSSIBLE AFTERWARD OR APPROPRIATE CHANGES IN THE PLAN SHALL BE IMMEDIATELY IMPLEMENTED. CONTRACTOR SHALL TAKE PROMPT ACTION TO RESOLVE EMERGENCY PROBLEMS.

8. THE CONTRACTOR SHALL TAKE ALL NECESSARY MEASURES TO PREVENT AIRBORNE DUST FROM BECOMING A NUISANCE TO NEIGHBORING PROPERTIES. THE CONTRACTOR SHALL CONFORM TO THE STANDARDS FOR DUST-CONTROL AS ESTABLISHED BY THE MONTEREY BAY UNIFIED AIR POLLUTION CONTROL DISTRICT. DUST CONTROL MEASURES TO BE IMPLEMENTED INCLUDE BUT ARE NOT LIMITED TO THE FOLLOWING:

A) PROVIDE EQUIPMENT AND MANPOWER REQUIRED FOR WATERING ALL EXPOSED OR DISTURBED EARTH. SUFFICIENT WATERING TO CONTROL DUST IS REQUIRED AT ALL TIMES.
B) COVER STOCKPILES OF DEBRIS, SOIL, OR OTHER MATERIALS WHICH MAY CONTRIBUTE TO AIRBORNE DUST.
C) KEEP CONSTRUCTION AREAS AND ADJACENT STREET FREE OF MUD AND DUST.
D) LANDSCAPE, SEED, OR COVER PORTIONS OF THE SITE AS SOON AS CONSTRUCTION IS COMPLETE.

THE CONTRACTOR SHALL ASSUME LIABILITY FOR CLAIMS RELATED TO WIND BLOWN MATERIAL. IF THE DUST CONTROL IS INADEQUATE AS DETERMINED BY THE CITY ENGINEER, THE CONSTRUCTION WORK SHALL BE TERMINATED UNTIL CORRECTIVE MEASURES ARE TAKEN.

A/C5 EROSION CONTROL PLAN
SCALE: 1"=30'

L&S ENGINEERING AND SURVEYING, INC.
2500 Garden Road, Suite E, Monterey, CA 93940
P: 831.655.2723 F: 831.655.3423
LandSEngineers.com

REGISTERED PROFESSIONAL ENGINEER
MARK R. STERNER
No. 69938
EXP. 9-30-10
CIVIL
STATE OF CALIFORNIA

DRAWN BY:	JPR
DESIGNED BY:	JPR
DATE:	10-28-13
SCALE:	AS NOTED
JOB NUMBER:	12-074
LAST REVISED:	10-15-14
REVISED BY:	MRS

EROSION CONTROL PLAN

IMPROVEMENT PLANS
TAYLOR FARMS
745 AIRPORT BLVD
SALINAS, CA
APN 003-692-008

C5

Exhibit F

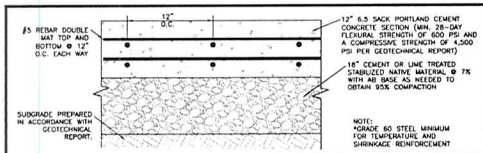

A C6 **CONCRETE PAVEMENT SECTION**

NTS

PAVEMENT SECTION SHOWN PER TAYLOR FARMS REQUEST

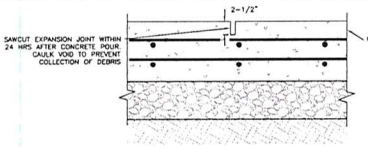

CONTRACTION JOINT

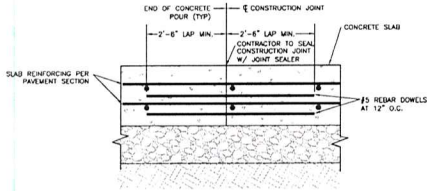

CONSTRUCTION JOINT

B C6 **CONCRETE JOINTS**

NTS

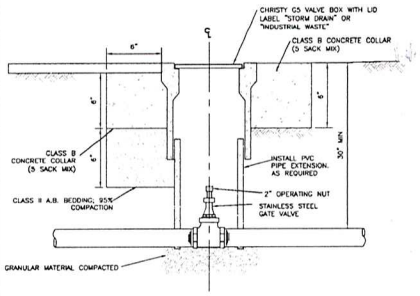

C C6 **DIVERSION GATE VALVE**

NTS

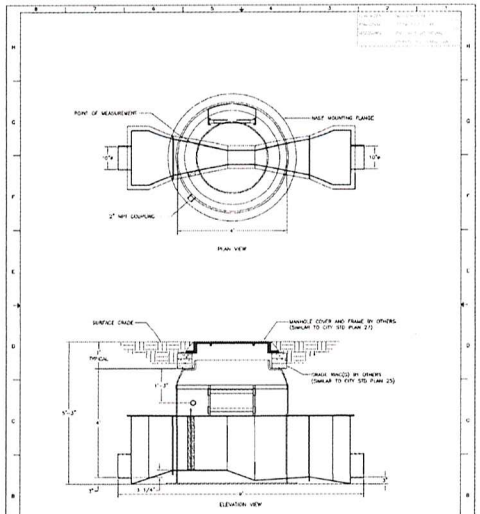

INDUSTRIAL WASTE METERING MANHOLE

D C6

NTS

1) FLOW IS FROM LEFT TO RIGHT

TRACOM

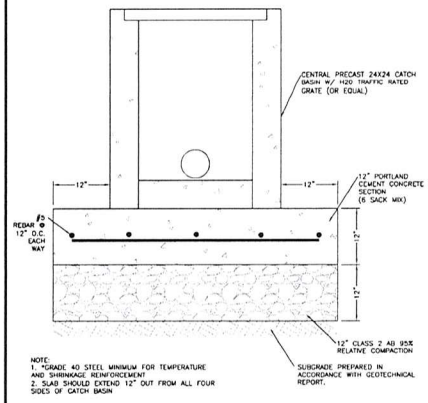

NOTE:
1. GRADE 40 STEEL MINIMUM FOR TEMPERATURE AND SHRINKAGE REINFORCEMENT
2. SLAB SHOULD EXTEND 12" OUT FROM ALL FOUR SIDES OF CATCH BASIN

E C6 **CATCH BASINS WITHIN PAVEMENT AREAS**

NTS

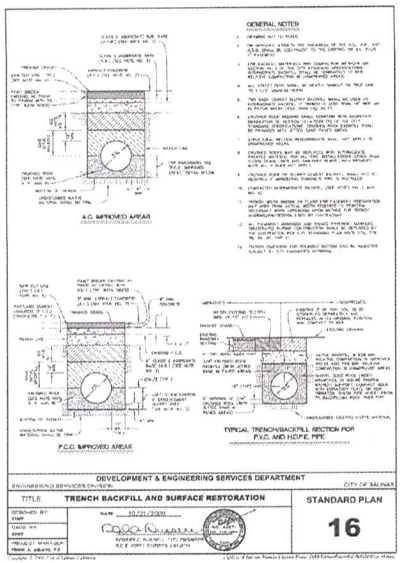

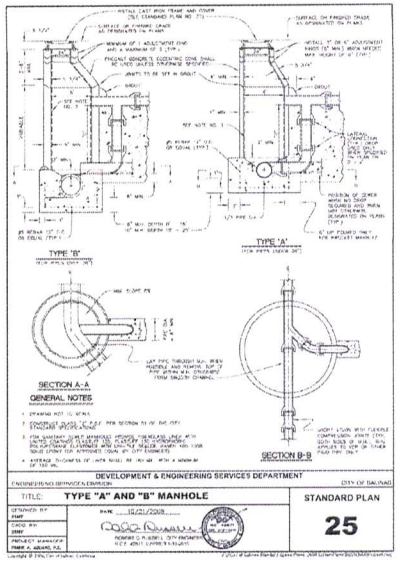

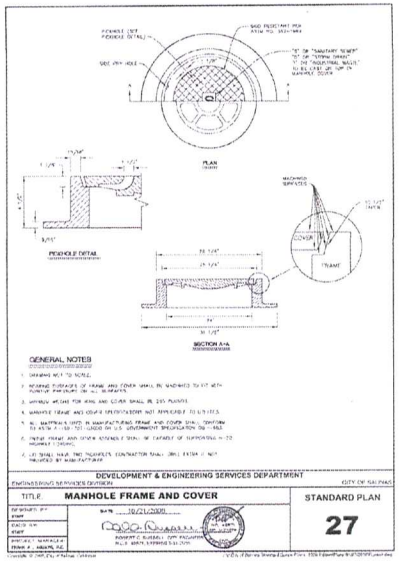

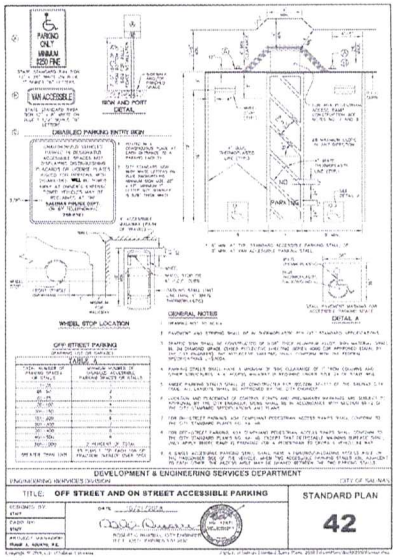

I&S ENGINEERING AND SURVEYING, INC.

REGISTERED PROFESSIONAL ENGINEER MARK R. STRENG No. 69930 EXP. 9-30-16 CIVIL STATE OF CALIFORNIA

DRAWN BY:	JPR
DESIGNED BY:	JPR
DATE:	10-28-13
SCALE:	AS NOTED
JOB NUMBER:	12-074
LAST REVISED:	10-15-14
REVISED BY:	MRS

CONSTRUCTION DETAILS

IMPROVEMENT PLANS
TAYLOR FARMS
745 AIRPORT BLVD
SALINAS, CA
APN 003-692-008

C6

Exhibit G

NOTE:
SIGN TO CONFORM TO FIRE DISTRICT STANDARDS AND TO CURRENT STATE AND LOCAL CODES AND REGULATIONS. SIGN TO FACE PAVEMENT AND BE 24" FROM EDGE OF PAVEMENT.

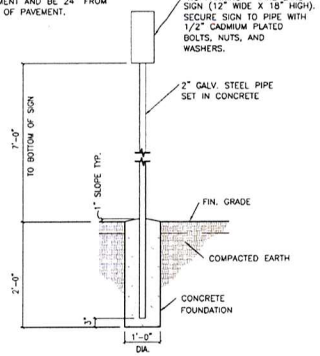

A/C7 **SIGN INSTALLATION**
NTS

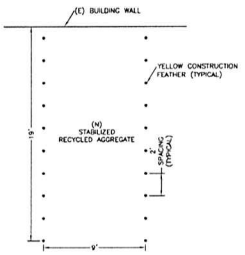

B/C7 **PARKING STALL DESIGNATION**
NTS

L&S ENGINEERING AND SURVEYING, INC
250 Cypress Street, Suite 6 Watsonville, California 95076
P 831.763.2721 F 831.724.3421
LandSengineers.com

REGISTERED PROFESSIONAL ENGINEER
MARK R. STERNER
No. 69930
EXP. 9-30-16
CIVIL
STATE OF CALIFORNIA

DRAWN BY:	JPR
DESIGNED BY:	JPR
DATE:	10-28-13
SCALE:	AS NOTED
JOB NUMBER:	12-474
LAST REVISED:	10-15-14
REVISED BY:	MRS

CONSTRUCTION DETAILS

IMPROVEMENT PLANS
TAYLOR FARMS
745 AIRPORT BLVD
SALINAS, CA
APN 003-692-008

C7

Exhibit H

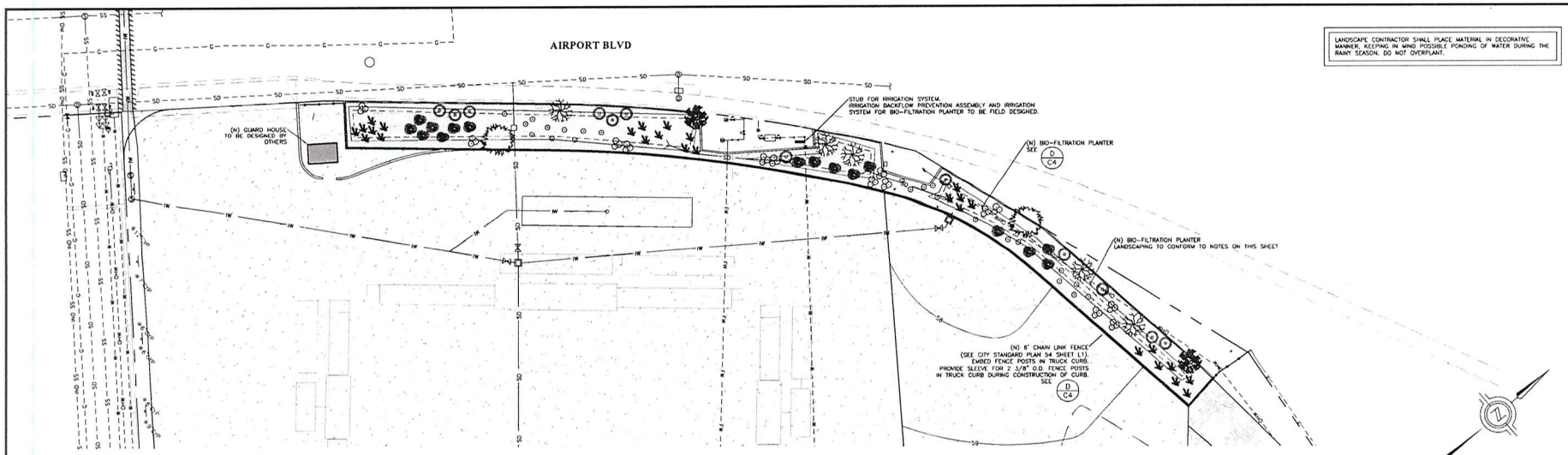

A L1 **LANDSCAPE PLAN**

SCALE: 1"=20'

20 0 10 20 40
GRAPHIC SCALE

NOTES:
1. ALL PLANT MATERIAL SHALL CONFORM TO THE CITY OF SALINAS STORM WATER DEVELOPMENT STANDARDS 2013
2. TREES SHALL BE STAKED PER CITY OF SALINAS STANDARD DETAIL 11.

TREES:

ALNUS RHOMBIFOLIA (DECIDUOUS)	WHITE ALDER	15 GALLON
POPULUS FREMONTII (DECIDUOUS)	FREMONT COTTONWOOD	15 GALLON
CERCIS OCCIDENTALIS (DECIDUOUS)	WESTERN REDBUD	15 GALLON

SHRUBS:

RHAMNUS CALIFORNICA	CALIFORNIA COFFEEBERRY	5 GALLON
ROSA CALIFORNICA	CALIFORNIA ROSE	5 GALLON

GRASSES:

CAREX TUMULICOLA (CAREX DIVULSA)	BERKELY SEDGE/ GRAY SEDGE	1 GALLON
FESTUCA RUBRA	RED FESCUE	SOD CUT 6" SQUARES
JUNCAS PATENS	CALIFORNIA GRAY RUSH	1 GALLON

MULCH:

AFTER PLANTING, EXPOSED SOILS SHALL BE COVERED WITH MULCH TO DISCOURAGE EROSION. MULCH SHOULD ONLY BE MAINTAINED UNTIL PLANT GROWTH HAS COVERED THE MAJORITY OF THE EXPOSED SOIL. MULCH SHOULD BE LARGE ENOUGH IN SIZE TO BE EASILY CLEANED AWAY FROM DRAIN INLETS AND NOT FIT THROUGH THE OPENING OF DRAIN GRATES. MULCH SHALL BE FREE OF STICKS AND OTHER DEBRIS. ALWAYS HOLD MULCH AWAY FROM ROOT CROWN. ACCEPTABLE MULCH TYPES INCLUDE:
- NITROGEN FORTIFIED BARK (1" TO 2" DIAMETER)
- REDWOOD BARK (1" TO 2" DIAMETER)

GORILLA HAIR (SHREDDED REDWOOD BARK) WILL NOT BE PERMITTED BY THE CITY OF SALINAS AS IT CAUSES AN IMPERVIOUS LAYER THAT ENCOURAGES MOLD GROWTH IN SALINAS'S SOILS.

SOURCE: CITY OF SALINAS STORM WATER DEVELOPMENT STANDARDS

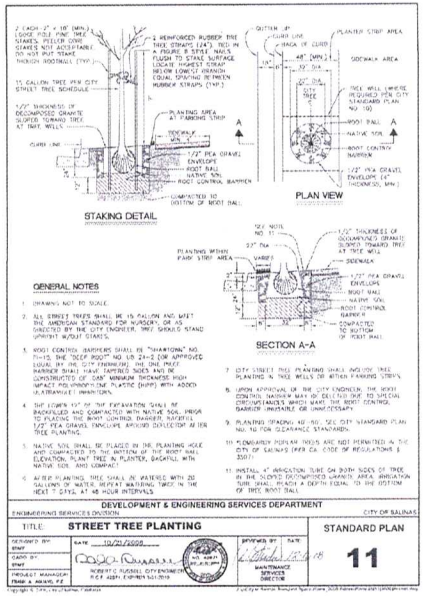

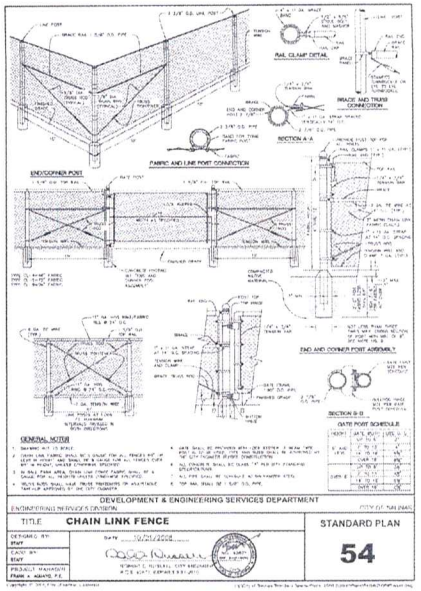

L&S ENGINEERING AND SURVEYING, INC
250 Cypress Point Drive, Monterey, CA 93940
P 831 655 2721 F 831 655 3425
LandSeng@earthlink.net

REGISTERED PROFESSIONAL ENGINEER MARK R. STEVENS No. 69930 EXP. 9-30-16 CIVIL STATE OF CALIFORNIA

DRAWN BY:	JPR
DESIGNED BY:	JPR
DATE:	10-28-13
SCALE:	AS NOTED
JOB NUMBER:	12-074
LAST REVISED:	10-15-14
REVISED BY:	MRS

LANDSCAPE PLAN

IMPROVEMENT PLANS
TAYLOR FARMS
745 AIRPORT BLVD
SALINAS, CA
APN 003-692-008

L1

Exhibit I

CITY OF SALINAS
PERMIT CENTER - BUILDING PLAN REVIEW
ENGINEERING SERVICES SECTION

PERMIT: MM2014-016 **DATE:** September 29, 2014
LOCATION: 745 Airport Boulevard
OWNER/APPLICANT/DESIGNER: Jeff Lorentz
PREPARED BY: María E. Contreras, Junior Engineer (758-7933)
GENERAL: AN OVER THE COUNTER BACK CHECK FOR THIS PROJECT'S RE-SUBMITTAL WILL NOT APPLY.
NOTES: DO NOT resubmit plans for recheck until comments from all disciplines have been addressed. The City's most updated Standard Specifications, Design Standards, and Standard Plans is available at http://www.ci.salinas.ca.us/services/engineering/pdf/2008CityStandards.pdf.
[1] *Contact Plans Reviewer to receive the digital copy of the required document.*

Designer/Applicant Responsibilities The designer/applicant is responsible for the accuracy of existing conditions represented on application materials, including type of improvement, location, size and function of existing utilities, underground improvements, surface improvements and all appurtenances thereto, grades, direction of flow and other existing conditions relied upon by the City for review and approval of this project. The designer/applicant is/are solely responsible and existing conditions are not subject to independent verification by the City. Should the existing conditions represented be different than those relied upon by the City for review and approval, the designer/applicant shall be responsible for payment of additional review and permit fees required for modification and/or revision of the project to bring it into compliance with City Codes, ordinances, standards, and requirements, including Building, Planning, Fire, and Engineering Department requirements, in addition to all other applicable federal, state and local standards. The designer/applicant is/are responsible for obtaining any additional permits and paying any other fees due from the City and/or other entities whether specifically identified by the City or not. When more than 2 submittals are required by the designer/applicant to gain approval due to the designer/applicant being unresponsive to City comments and/or requirements, the designer/applicant is responsible for the City costs of any reviews over 2 total for the additional reviews including any processing/overhead costs. **Applicant and/or applicant's representative shall provide a complete item by item response to the Engineering Services Section's comments along with supporting documents and revised plans or the submittal will be returned as incomplete and no further review will take place until all items have been sufficiently addressed. The responses shall include what changes were made to the package to address the comments or why the comment was not addressed such as an engineering reason why the comment cannot be complied with.** Please contact the comment preparer to discuss the comments with the applicant or meet with them to clarify what is required to facilitate speedy processing.

DEVELOPMENT PROPOSAL: The proposal is for the removal of an existing AC parking lot to be replaced with concrete and includes addition of 15,370 s.f. concrete parking lot and a proposed stabilized recycled aggregate area for new/relocated parking spaces. In addition, the applicant is proposing to connect into the City's industrial waste system.

APPLICATION INFORMATION/REVISIONS REQUIRED FOR RE-SUBMITTAL FOR PLANNING PERMIT APPROVAL-*The current plans submittal addresses and satisfies the majority of the Permit Center Engineering Services Section requirements at the planning level with the conditions and requirements noted below, which shall be addressed at the building permit process.*

APPLICATION PACKAGE REVISIONS/INFORMATION REQUIRED FOR BUILDING PERMIT SUBMITTAL AND APPROVAL-The following information must be shown on/included in the application package plans for building permit review and approval:

1. Please provide a detailed scope of work for the currently proposed partial parking lot rebuild permit application. Note if the proposed truck scale pit and guard house will be part of the current building permit.

Response:

2. **CITY SWDS COMPLIANCE:** Provide a final SWCP in compliance with the City's 2013 SWDS. Please refer to the enclosed review comments from Jeffery Crump, RBF Consulting, dated September 29, 2014.

Response:

Exhibit J

3. Show all existing on-site and off-site facilities of the property (i.e. vehicle/truck parking and circulation, scales, storm drain and sanitary sewer system layouts, sidewalk, fire and domestic water services, etc.). Plan does not show existing utilities or conditions at the southerly side of the property.

Response:

4. The soils engineer-of-record must review the most recent project plans to verify the recommendations/specifications have been incorporated. The name, address, and phone numbers of soils engineer-of-record, and the date of the soils report must be shown on the building permit plans. Please provide an updated letter from Earth Systems Pacific approving the current design proposal.

Response:

5. Please be advised that the State Department of Transportation has jurisdiction over some portions of Airport Boulevard. Prior to issuance of any City building permits, applicant must provide a Caltrans approval letter and/or State Encroachment Permit (if required by Caltrans) for all work that may impact the public way along Airport Boulevard (e.g. trenching, striping, lane closure, etc.). Contact Caltrans Encroachment Permit Branch - District 5 to process said encroachment permit at:

   Steve Senet, District Five Encroachment Permit Engineer
   California Department of Transportation
   District 5, Permits Branch
   50 Higuera Street
   San Luis Obispo, CA 93401
   (805) 549-3152
   E-mail: steve_senet@dot.ca.gov

   Please provide e-mail message/letter referenced in the Responses to the project's review comments.

Response:

6. Sheet C5: Provide a copy of and list the issued WDID number for the project in this plan. **The SWPPP documentation shall also be submitted for review and approval by City staff.**
   - OWNER/CONTRACTOR/DEVELOPER *INFORMATION/GUIDE ON THE CITY'S STORMWATER PERMIT*: Please refer to the following Stormwater BMPs brochures for proper measures, care, operations and maintenance at your business site, enclosed: *Mobile Washers and Cleaners*, *Painting*, *Fresh Concrete and Mortar Application*, *General Construction and Site Supervision*, *Landscaping, Gardening & Pest Control*.

Response:

7. Applicant shall state the property's current and proposed new operations affecting the storm drain system and industrial waste system. Show all existing storm drain, industrial waste and/or sanitary sewer system layouts and connections to City mainlines/facilities. Developer shall provide an Operational Statement of the loading docks' area. Please be advised that pressure washing and sanitizing of loading docks into the stormdrain system is prohibited. Please refer to the following Stormwater BMPs brochure for proper care and maintenance of loading dock areas, enclosed: Mobile Washers and Cleaners.

Response:

8. Ron Cole, the City Wastewater Manager, is currently reviewing the proposed industrial waste connection for the current project proposal and will be providing comments at a later time.

Response:

9. Provide a Traffic Control and Pedestrian Detour Plan for any street/sidewalk/traffic closures in the public right-of-way as part of this project. The following are City of Salinas minimum requirements of the Traffic Control Plan.
   a. Work in the public right-of-way is allowed only between 0900-1600 hours and 1800-2100 hours.
   b. Minimum clear lane widths shall be 11 feet.
   c. Any night work must first be reviewed and approved by the City Engineer.
   d. Advanced Signage for street, street parking, and/or sidewalk shall be posted 72 hours prior to the day of closure.
   e. Show/identify the general location of drive access points for adjacent businesses affected by the proposed street lane closure.

If applicant decides to have the Project Contractor submit the required Traffic Control and Pedestrian Detour Plan, the above language shall be noted on the project plans and/or project specifications, including the following note so that the Contractor is aware of the requirement:

> *Contractor shall provide a Traffic Control and Pedestrian Detour Plan for any street/sidewalk/traffic closures in the public right-of-way as part of this project. The plan must be submitted to City staff for review and approval 1 work week in advance prior to any work/obstruction in the public right-of-way.*

Response:

- All construction work in the City right-of-way will require a separate Encroachment Construction Permit. The fee is in addition to and separate from any Development Fees assessed by the building permit. Encroachment permits may be obtained at the same time and run concurrently with the building permit.

Response:

\\salsvr44\deptpvt\Permit\mariac\Documents\DRC-Maria's\Discretion\Airport Blvd. 745.MM2014-016.doc

From: Crump, Jeffery
To: Maria Contreras
Cc: Walter Grant
Subject: RE: Taylor Farms SWCP - 745 Airport Boulevard [MM2014-016]
Date: Monday, September 29, 2014 9:49:47 AM
Attachments: image002.png

Maria,

Below are the SWDS comments on the Taylor Farms 745 Airport Blvd Project August 28th submittal:

Overall, the project meets most of the SWDS requirements. The area that they have designated as "Pavement being rehabilitated and replaced to original line, grade, and hydraulic capacity" is exempt and does not need to be included in the threshold determination spreadsheet.

The following items are required to be included in the SWDS:

1) Infiltration Rate- The 745 Airport Blvd August 28th submittal contains an assumed infiltration rate of 0.3 inches per hour. Site infiltration rate testing is required whenever a design infiltration rate is used. See SWDS Section 3 for infiltration system testing requirements. The minimum infiltration testing method acceptable for use in the City of Salinas is the constant head double ring infiltrometer. *Native Soil Assessment for Small Infiltration-Based Stormwater Control Measures* by Dennis Shallenberger of Earth Systems Pacific has also been approved as an infiltration testing method where appropriate. The infiltration test shall be conducted in accordance with standard procedures by qualified personnel using appropriate data collection forms.

2) Site Condition Calculations- Peak flow rates for pre and post development conditions are required (see SWDS 2.3.2.30). The applicant should include calculations of pre-development and post-development discharges in the SWCP. See SWDS Section 5 for acceptable methodology.

Thanks,

Jeffery Crump, PE, CFM, QSD | Associate / Civil Engineer | RBF Consulting, a Company of Michael Baker International
4540 Duckhorn Drive, Suite 202 | Sacramento CA, 95834 | [O] 916-928-2638
jcrump@mbakerintl.com | www.mbakerintl.com

Michael Baker
INTERNATIONAL
RBF jma ELPA KASEMAN SALLYPORT
Innovation Done Right...We Make a Difference

From: Maria Contreras [mailto:mariac@ci.salinas.ca.us]

CITY OF SALINAS
FIRE DEPARTMENT
DEVELOPMENT REVIEW COMMENTS

DATE: September 8, 2014

ADDRESS: 745 Airport Blvd.

PROJECT #: MM2014-016

THE FOLLOWING ITEMS SHALL BE INCORPORATED INTO THE BUILDING PLAN SUBMITTAL. ALL REQUIREMENTS SHALL BE ADDRESSED BY COMMENT(S), AND/OR PLAN DETAIL(S), AND/OR MANUFACTURER'S / LISTING DOCUMENTS. TO EXPEDITE THIS PLAN/APPLICATION RECHECK, RETURN A COPY OF THESE COMMENTS WITH YOUR CORRECTED PLANS TO THE PERMIT CENTER.

- All plans shall conform to 2013 CBC, 2013 CFC and the most current NFPA standards required by currently adopted codes. As amended by the Salinas Municipal Code online at http://municipalcodes.lexisnexis.com/codes/salinas/
- This is a preliminary review of a plan. This fire department review is focused on fire department access to the parcel and building, hydrant placement, as well as fire flow from hydrants in the vicinity.
- Additional comments for corrections may be made when detailed plans are submitted for construction.
- We will not correct your incomplete plans in all respects. Consider following the "Effective Use of the IBC/CBC" found in the front pages of the International/California Building Code to produce a 100% construction plan.
- Deferred submittals for automatic fire protection systems may be allowed, if the construction plan does not include all system specifications necessary to complete the building construction plan review.
- Provide the Fire Department with one 8½" x 11" final site plan. An electronic version is preferred.
- These development review comments are intended to guide the project towards a complete construction plan submittal.

FIRE PROTECTION WATER SUPPLIES

Fire hydrants shall comply with CFC section CFC 507.5 and Appendix C

FIRE APPARATUS ACCESS ROADS

The site plan shall comply with CFC Chapter 503 and Appendix D

All required access roadways (i.e. fire apparatus roads) shall be completed to a minimum width of 20', capable of supporting 67,000 lbs. with an all-weather surface, to within 150' of all stockpiles and sides of buildings with combustible construction, unless authorized by the Fire Code Official."

CFC 503.2.3 & D102 **NOTE: See below for alternative surfaces.**

(a)Alternative fire apparatus surfaces, such as "GrassCrete", "Turf Block", or similar-type materials may be used under certain conditions. An Alternate Materials and Methods request in accordance with **California Fire Code Appendix Chapter 1, Section 104.9,** shall be submitted to the Fire Code Official prior to installation. The submittal shall include the design criteria based upon the imposed load of fire apparatus, and shall include the following:

- Marked, with the lane at the curb delineated with lights, bollards, paint, and/contrasting material.
- Structurally sound to preclude movement or disbanding with soil movement.

Exhibit K

- Field tested by the contractor in the presence of the Fire Code Official. Contact the local fire agency for specifications on testing. Testing may include driving the alternate surface by a weight-verified vehicle. The soil shall be soaked prior to testing.
- Prior to final approval, the engineer of record (civil or soils engineer) shall certify the installation.

"NO PARKING - FIRE LANE" signs (12" wide X 18" high) are required to be installed at entrance to parking lot and along both sides of interior access roadways in locations where vehicle parking would encroach on the required 20 - 26 foot clear width of roadway (**CFC 503.3 & D103.6**). All raised curbs shall be painted red with "FIRE LANE" stenciled 4 inches at 30 foot intervals."

If you have any questions, you may contact me Monday – Wednesday, at (831) 758-7960; or at mark.treuge@ci.salinas.ca.us.

Thank You

Mark Treuge
Fire Plan Checker/Fire Inspector